DART AEROSPACE

Dart Aerospace Ltd.
1270 Aberdeen St
Hawkesbury, ON
K6A 1K7
Canada

Tel (613) 632-5200
Fax 613 632-5246

D4930-3

Job Sheet 202733

Part No: D4930-3 **Job Qty:** 8 pcs
Part Name: Bearpaw

Part Weight: 0 lbs **Status:** New **Priority:** Medium
Job Created: 11/1/19 **Job Tracking No:**
Due Date: 11/28/19 **Created By:** Linda Lacelle
Type: Stock **Description:**
Note: DWG REV B IPP REV:A NEW ISSUE 13-10-09 JLM VERIFIED BY:DD
Ship Via:

Bill of Materials

Job Routing

Op No	Operation	Qty	Start Date	Due Date	Standard Setup Hrs	Standard Run Hrs	Workcenter/Supplier	Sign-off
90	Purchasing	8 pcs		11/28/19	0.00	0.00	Purchasing - 1	NOV 1 1 2019
	2019-11-04 PO#B044981 KG				x 8		Purchasing - 2	
							Purchasing - 3	
100	Packaging 2-1 - Receive - B4B	8 pcs		11/28/19	0.00	0.00	Packaging 2 - 1 - B4B	
							Packaging 2 - 2 - B4B	
							Packaging 2 - 3 - B4B	
							Packaging 2 - 5 - B4B	NOV 1 1 2019
							Packaging 2 - 4 - B4B	
							Packaging 2 - 6 - B4B	
							Packaging 2 - 7 - B4B	
							Packaging 2 - 8 - B4B	
							Packaging 2 - 9 - B4B	
							Packaging 2 - 10 - B4B	
							Packaging 2 - 11 - B4B	
							Packaging 2 - 12 - B4B	
							Packaging 2 - 13 - B4B	
							Packaging 2 - 14 - B4B	
							Packaging 2 - 15 - B4B	
							Packaging 2 - 16 - B4B	
							Packaging 2 - 17 - B4B	
							Packaging 2 - 18 - B4B	
							Packaging 2 - 19 - B4B	
							Packaging 2 - 20 -	

Plex 11/1/19 10:35 AM dart.lacelle.linda

DART AEROSPACE

1270 Aberdeen Street
Hawkesbury, ON K6A 1K7
CANADA
TEL: 1 613 632 – 5200
Email: sales@dartaero.com
www.dartaerospace.com

Container No: S230541

Part: D4930 – 3
Job No: 202733
Serial No/Batch: S230541
Revision:
Inspector:
Exp Date:
Instructions: Various STC's

Date: 11/11/19

					B4B	
					Packaging 2 - 21 - B4B	
					Packaging 2 - 22 - B4B	
					Packaging 2 - 23 - B4B	
					Packaging 2 - 24 - B4B	
					Packaging 2 - 25 - B4B	
					Packaging 2 - 26 - B4B	
					Packaging 2 - 27 - B4B	
					Packaging 2 - 28 - B4B	
					Packaging 2 - 29 - B4B	
					Packaging 2 - 30 - B4B	
					Packaging 2 - 31 - B4B	
					Packaging 2 - 32 - B4B	
					Packaging 2 - 33 - B4B	
					Packaging 2 - 34 - B4B	
					Packaging 2 - 35 - B4B	
					Packaging 2 - 36 - B4B	
105 **QC 6**	8 pcs	11/28/19	0.00 0.00	QC 6 - 9	DAS 81 9-89 DAS 52 9-89	NOV 12 2019
				QC 6 - 68		
				QC 6 - 61		
				QC 6 - 40		
				QC 6 - 81		
120 **HAAS 4 Axis - B4B**	8 pcs	11/28/19	0.25 11.27	HAAS - 1 - B4B		19/11/14
				HAAS - 2 - B4B		
				HAAS - 3 - B4B		
				HAAS - 4 - B4B		
140 **QC 8**	8 pcs	11/28/19	0.00 0.00	QC 8 - 12		
				QC 8 - 14		on 19/11/25
				QC 8 - 17		
				QC 8 - 20		
				QC 8 - 25		
				QC 8 - 3		
				QC 8 - 32		
				QC 8 - 33		
				QC 8 - 35		
				QC 8 - 39		
				QC 8 - 4		
				QC 8 - 44		
				QC 8 - 45		
				QC 8 - 49		
				QC 8 - 58		
				QC 8 - 8		
				QC 8 - 9		
				QC 8 - 68		
				QC 8 - 67		
				QC 8 - 1 (A)		

						QC 8 - 47	
						QC 8 - 40	
						QC 8 - 52	
						QC 8 - 23	
						QC 8 - 57	
						QC 8 - 76	
						QC 8 - 61	
150	**Packaging 3-1 - Stock - B4B**	8 pcs	11/28/19	0.00	0.00	Packaging 3 - 1 - B4B	
						Packaging 3 - 2 - B4B	
						Packaging 3 - 3 - B4B	
						Packaging 3 - 4 - B4B	DAS 28 9-89
						Packaging 3 - 5 - B4B	
						Packaging 3 - 6 - B4B	
						Packaging 3 - 7 - B4B	
						Packaging 3 - 8 - B4B	
						Packaging 3 - 9 - B4B	
						Packaging 3 - 10 - B4B	
						Packaging 3 - 11 - B4B	
						Packaging 3 - 12 - B4B	
						Packaging 3 - 13 - B4B	
						Packaging 3 - 14 - B4B	
						Packaging 3 - 15 - B4B	
						Packaging 3 - 16 - B4B	
						Packaging 3 - 17 - B4B	
						Packaging 3 - 18 - B4B	
						Packaging 3 - 19 - B4B	
						Packaging 3 - 20 - B4B	
						Packaging 3 - 21 - B4B	
						Packaging 3 - 22 - B4B	
						Packaging 3 - 23 - B4B	
						Packaging 3 - 24 - B4B	
						Packaging 3 - 25 - B4B	
						Packaging 3 - 26 - B4B	
						Packaging 3 - 27 - B4B	
						Packaging 3 - 28 - B4B	
						Packaging 3 - 29 - B4B	
						Packaging 3 - 30 - B4B	
						Packaging 3 - 31 - B4B	
						Packaging 3 - 32 - B4B	
						Packaging 3 - 33 -	

					B4B	
					Packaging 3 - 34 - B4B	
					Packaging 3 - 35 - B4B	
					Packaging 3 - 36 - B4B	ST642
160 **QC 21 - SA**	8 pcs	11/28/19	0.00	0.00	QC 21 - SA - 21	DAS 21 NOV 2 8 2019
					QC 21 - SA - 70	
					QC 21 - SA - 53	

Part Op Descriptions:
90 - 1-Issue PO; 4498 2-Cut blanks as per D4930-3 file.
100 - (Pac2-Receive & Inspect for Damage & Mat'l Certs.)
105 - (QC6- All purchased or subcontracted products)
120 - (HAAS CNC Vertical Machine) 1-Inspect material for defects or damage prior to machining 2-Machine as per Folio FB218 and Dwg
140 - QC8- Inspect parts - second check)
150 - (Identify as per dwg & Stock Location:_____)
160 - (QC21- Final Inspection - Work Order Release)

Job BOM

Part / Item	Component Name	Quantity	Operation	Container
D4930-3P	Bearpaw	8 (1 ea)	90-Purchasing	S-230538
MUHMWB10	UHMW 1" Black - 48"x120" Tivar Mfg.#52480104	14.4000 sf (1.8 ea)	90-Purchasing	S228711

Job Allocations

Operation	Component Part	Required	Inventory	Allocated
90-Purchasing	D4930-3P	8	0	0
	MUHMWB10	14	666	0

Part Specifications

Spec No	Description	Target/Tolerance	Limits	Type	Special Comments
1	Bearpaw	0.380Inches ± 0.030	0.410 0.350	0.38	
2	Bearpaw	2.380Inches ± 0.030	2.410 2.350	2.38	
3	Bearpaw	0.260Inches + 0.006 - 0.001	0.266 0.259	0.26	Diameter
4	Bearpaw	4.250Inches ± 0.010	4.260 4.240	4.250	
5	Bearpaw	5.870Inches ± 0.010	5.880 5.860	5.870	
6	Bearpaw	1.083Inches ± 0.010	1.093 1.073	1.083	
7	Bearpaw	3.850Inches ± 0.010	3.860 3.840	3.850	
8	Bearpaw	14.760Inches ± 0.030	14.790 14.730	14.760	
9	Bearpaw	5.500Inches ± 0.030	5.530 5.470	5.500	
10	Bearpaw	0.250Inches ± 0.030	0.280 0.220	0.250	Radius
11	Bearpaw	0.070Inches ± 0.030	0.100 0.040	0.06	
12	Bearpaw	45.000Degrees ± 0.500	45.500 44.500	45°	Angle
13	Bearpaw	2.170Inches ± 0.030	2.200 2.140	2.170	
14	Bearpaw	0.250Inches ± 0.030	0.280 0.220	0.255	
15	Bearpaw	0.630Inches ± 0.030	0.660 0.600	0.635	
16	Bearpaw	0.950Inches ± 0.010	0.960 0.940	0.950	
17	Bearpaw	0.130Inches ± 0.030	0.160 0.100	0.13	
18	Bearpaw	45.000Degrees ± 0.500	45.500 44.500	45°	Angle
19	Bearpaw	0.525Inches ± 0.010	0.535 0.515	0.526	
20	Bearpaw	0.375Inches ± 0.010	0.385 0.365	0.385	
21	Bearpaw	1.300Inches ± 0.030	1.330 1.270	1.300	
22	Bearpaw	5.700Inches ± 0.030	5.730 5.670	5.700	
23	Bearpaw	10.500Inches ± 0.030	10.530 10.470	10.500	
24	Bearpaw	14.140Inches ± 0.030	14.170 14.110	14.140	
25	Bearpaw	0.450Inches ± 0.030	0.480 0.420	0.460	
26	Bearpaw	0.880Inches + 0.010 - 0.001	0.890 0.879	0.88	Diameter

DAS 52 9-89 11/1/24

Plex 11/1/19 10:35 AM dart.lacelle.linda

Dart Aerospace Ltd.
1270 Aberdeen St
Hawkesbury, ON
K6A 1K7
Canada

Tel (613) 632-5200

PURCHASE ORDER
POHB044981

Supplier: ACI002-VC
Acier Duval Steel
5888 Country Road 17
Plantagenet
ON
K0B 1L0 Canada
Phone: 613-673-5474
Fax: 613-673-4576

Ship To: 1270 Aberdeen Street
Hawkesbury
ON
K6A 1K7 Canada
Phone: 613-632-5200

PO No: POHB044981
PO Date: 11/1/19
Due Date: **11/15/19**
Purchase Order Revision:
Revision Date:
Ship-To Contact: Guerin, Kimberley
Phone: 613-632-5200 Ext: 298
kguerin@dartaero.com

Via: Ground
Pymt Terms: Net 30
Freight Terms: Prepaid
Special Comments:

Items

Line Item	Job	Part	Drawing	Supplier Part No	Item No	Description	Status	Account	Due Date	Order Quantity	Received Quantity	Balance	Unit Price (CAD)	Extended Price
1	202736	D2432P	D2432 Rev H			Bearpaw 19" X 24" - cut blanks as per D2432_NEST7 file	Firmed X24	-	11/15/19	24 Ea	0 Ea	24 Ea NOV 1 1 2019	$35.26/Ea	$846.24
2	202735	D2432P	D2432 Rev H			Bearpaw 19" X 24" - cut blanks as per D2432_NEST7 file	Firmed X24	-	11/18/19	24 Ea	0 Ea NOV 1 1 2019	24 Ea	$35.26/Ea	$846.24
3	202734	D4355-1P	D4355 Rev B			Bearpaw - cut blanks as per D4355-1 file	Firmed X6	-	11/15/19	6 Ea	0 Ea NOV 1 1 2019	6 Ea	$44.88/Ea	$269.28
4	202733	D4930-3P	D4930 Rev B			Bearpaw - cut blanks as per D4930-3 file	Firmed X8	-	**11/15/19**	8 Ea	DAE 81 9-89	8 Ea NOV 1 1 2019	$25.61/Ea	$204.88
5	202732	D4930-1P	D4930 Rev B			Bearpaw - cut blanks as per D4930-1 file	Firmed X4	-	11/15/19	4 Ea	0 Ea	4 Ea NOV 1 1 2019	$23.09/Ea	$92.36
6	202731	D5377-1P	D5377 Rev A			Bearpaw - cut blanks as per D5377-1 file	Firmed X8	-	11/15/19	8 Ea	0 Ea	8 Ea NOV 1 1 2019	$48.89/Ea	$391.12
7	202742	D4353-041P	D4353 Rev B			Bearpaw - cut blanks as per D4353-041 file	Firmed X10	-	11/15/19	10 Ea	0 Ea	10 Ea NOV 1 1 2019	$42.68/Ea	$426.80

Dart Aerospace Ltd.
1270 Aberdeen St
Hawkesbury, ON
K6A 1K7
Canada

Tel (613) 632-5200

PURCHASE ORDER
POHB044981

Items

Line Item	Job	Part	Drawing	Supplier Part No	Item No	Description	Status	Account	Due Date	Order Quantity	Received Quantity	Balance	Unit Price (CAD)	Extended Price
8	202741	D2521P	D2521 Rev A			Individual Bearpaw - cut blanks as per D2521_BLANK file	Firmed X14	-	11/15/19	14 Ea	0 Ea NOV 1 1 2019	14 Ea	$57.77/Ea	$808.78
9	202740	D4297-1P	D4297 Rev C			Bearpaw - cut blank as per D4297-1 file	Firmed X6	-	11/15/19	6 Ea	0 Ea NOV 1 1 2019	6 Ea	$33.18/Ea	$199.08
10	202737	D2435P	D2435 Rev E1			Bearpaw - cut blank as per D2435 file	Firmed X12	-	11/15/19	12 Ea	0 Ea	12 Ea NOV 1 1 2019	$26.45/Ea	$317.40
													Grand Total:	$4,402.18

Order Notes

Procurement Quality Clauses
A005 RIGHT OF ENTRY
A016 PERSONNEL QUALIFICATION
A026 CERTIFICATION OF MATERIAL CONFORMANCE
A032 DOCUMENT SPECIAL REQUIREMENTS
A033 STATEMENT OF CONFORMITY/TEST RECORDS FOR NAS, AN and MS FASTENERS
A040 NOTIFICATION OF QUALITY ESCAPE
A041 QUALITY MANAGEMENT SYSTEM
A042 DART NOTIFICATION BY SUPPLIER
A043 RETENTION OF QUALITY DOCUMENTS

A048 COUNTERFEIT PARTS AVOIDANCE, DETECTION, MITIGATION AND DISPOSITION PROGRAM

A049 SUPPLIER AWARENESS

Terms & Condition of Purchasing(Suppliers) and Procurement Quality Clauses are an integral part of our AS9100 requirements. To learn in detail, please visit www.dartaerospace.com for further explanation.

Plex 11/6/19 8:34 AM Dart.Guerin.Kimberley

Acier Duval Steel div. JD Welding Inc.
5888 County Road 17, Plantagenet ON. K0B1L0
Tel: 613-673-4574 ~~ toll free\ sans frais 1-866-831-5722
info@adsindustries.com www.adsindustries.com

Certificate of Conformance (CoC)

Customer Name	Dart Aerospace
P.O. Number	POHB044981
Part Number	D4930-3P (Job : 202733)
Drawing Number	D4930 Rev B
Material thickness	1"
Quantity	8
Invoice \ Packing slip #	8123

DAS
81
9-89

All technical requirements of the contract are satisfied. Quality and performance are in accordance with the contract, the specifications, and all references and associated contratual drawing and document

I, as a supplier to Dart Aerospace, acknowledge and certify the material covered under this document is produced in accordance with the following:

The Quantity in the P.O	
The Drawing send to the administration	
And other document send in regard to the pieces	

*(Acknowledge by marking the boxes)

Signature	Title	Date
	Quality Management	November 7 2019

This certifies the parts / items / material identified above conform to all applicable drawing and/or specification as evidenced by report or other documentation on file and all other purchase order and

A.D.S.

Acier Duval Steel

Fabrication shop: aluminum and stainless steel plate cutting, bending, rolling and punching services.
Atelier de fabrication: aluminium et acier inoxydable Service de coupage, pliage, roulage et poinçonnage.

1-866-831-5722
T: 613-673-4574
info@adsindustries.com

5888 County Rd. 17
Plantagenet, ON.
K0B 1L0

Packing Slip:

Sold to:		Ship to:
Order No:		Sold By:
Shipped By:		Ship date:
Tracking No:		

Item No	Quantity	Description
	2 ✓	
	2	
	1	
	1	
	1

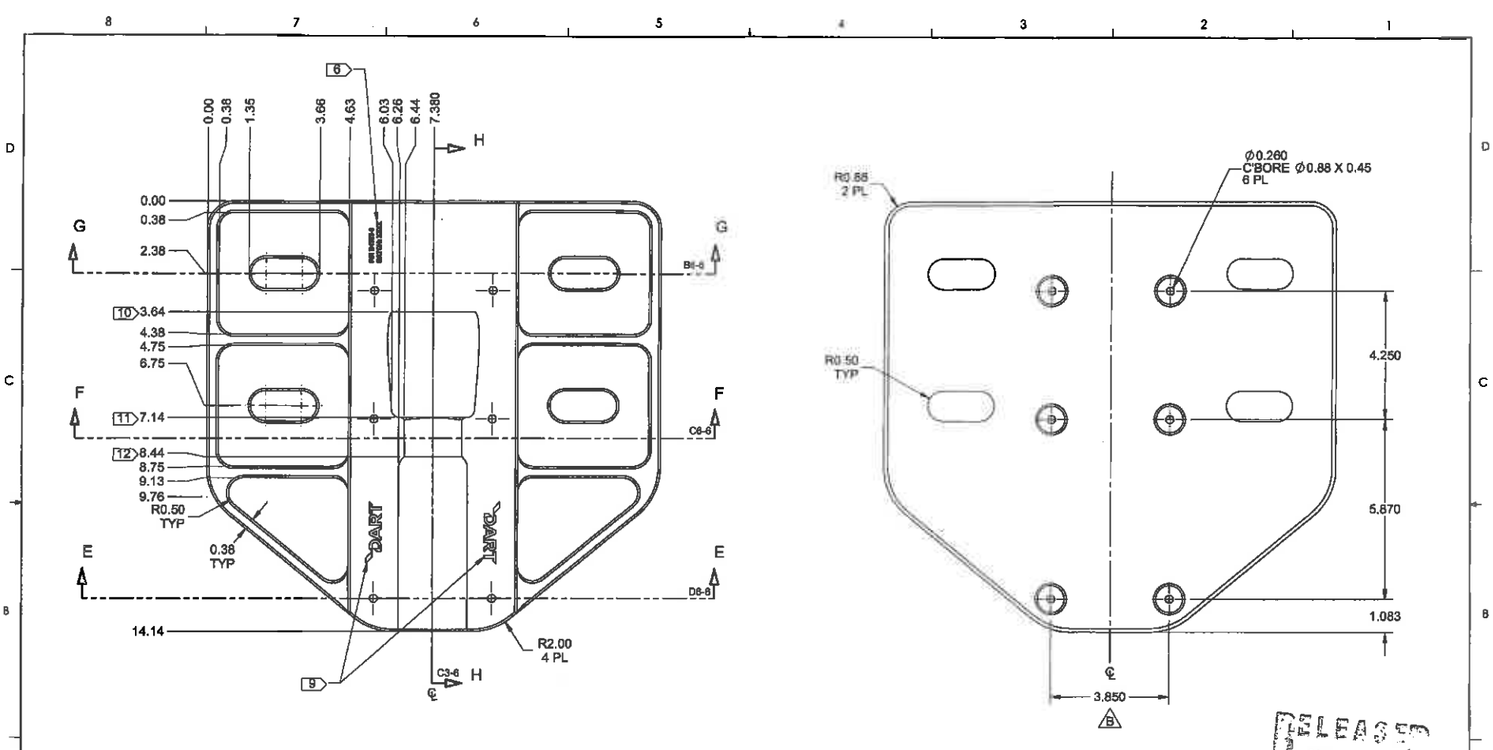

D4930-3 BEARPAW

NOTES:
1) MATERIAL: BLACK UHMW TIVAR 1000 VIRGIN MATERIAL SHEET, 1.00 THICK
REF DART SPEC MUHMWB10
2) FINISH: NONE
3) TOLERANCES: PER DART QSI 018 UNLESS OTHERWISE NOTED
4) UNITS: INCHES UNLESS OTHERWISE NOTED
5) BREAK SHARP EDGES: 0.005 TO 0.010 MAX
6) IDENTIFICATION: IDENTIFY PER QSI 044 6.3 0.010-0.012 DP WITH
A MINIMUM 0.010 RAD
7) WEIGHT: 3.39 lbs
8) PART IS SYMMETRIC ABOUT ℄
9) ENGRAVE "DART" LOGO AS SHOWN 0.010 - 0.012 DP WITH A
MINIMUM 0.010 RAD
10) UNIFORM TAPER
11) MACHINE R1.25 BORE
12) MACHINE R1.38 BORE

RELEASED
2013-12-12

DESIGN	VS	DART AEROSPACE LTD
DRAWN	VS	HAWKESBURY, ONTARIO, CANADA
CHECKED	HS	DRAWING NO. D4930 — REV. B
MFG. APPR.	JLM	SHEET 5 OF 6
APPROVED	HS	TITLE BEARPAW — SCALE INTS
DE APPR.	DS	
DATE	13.12.10	

APPROVED

COPYRIGHT © 2013 BY DART AEROSPACE LTD
THIS DOCUMENT IS PRIVATE AND CONFIDENTIAL AND IS SUPPLIED ON THE EXPRESS CONDITION THAT IT IS TO BE NOT TO BE USED FOR ANY PURPOSE OR COPIED OR DISCLOSED TO ANY OTHER PERSON WITHOUT WRITTEN PERMISSION FROM DART AEROSPACE LTD.